ELSEVIER

Analytica Chimica Acta 468 (2002) 119–131

ANALYTICA CHIMICA ACTA

www.elsevier.com/locate/aca

Multicommutation in flow analysis: concepts, applications and trends

Fábio R.P. Rocha [a,1], Boaventura F. Reis [a], Elias A.G. Zagatto [a,*], José L.F.C. Lima [b], Rui A.S. Lapa [b], João L.M. Santos [b]

[a] *Centro de Energia Nuclear na Agricultura, Universidade de São Paulo, P.O. Box 96, Piracicaba, 13400-970 SP, Brazil*
[b] *Faculdade de Farmácia, Universidade do Porto, Rua Anibal Cunha 164, Porto 4050-047, Portugal*

Received 2 May 2002; received in revised form 25 June 2002; accepted 4 July 2002

Abstract

Multicommutation refers to flow systems designed with discrete computer-controlled commutators resulting in flow networks in which all the steps involved in sample processing can be independently implemented. The flow systems can be re-configured by the control software, presenting thus increased versatility, potential for automation and for minimization of both reagent consumption and waste generation. The main objective herein is to review the concept of multicommutation in order to permit a proper evaluation of the characteristics and potentialities of the related flow systems, to assist methodological implementation and to discuss similarities with other existing strategies. Implementation of tandem streams, controlled dilutions, wide-range determinations, sequential determinations, titrations and in-line separation/concentration are emphasized.
© 2002 Elsevier Science B.V. All rights reserved.

Keywords: Multicommutation; Flow analysis; Tandem streams; Automation

1. Introduction

Since the inception of flow analysis in the earlier fifties [1], flow systems have proved to be excellent tools for solution handling and consequently for carrying out methods related to wet chemical analysis. As a rule, the aqueous sample is introduced into the analytical path and processed inside it under reproducible conditions. The manifold can thus be regarded as a closed laboratory where the sample contamination by the environment (and vice versa) is avoided. Other features inherent to flow analysis are the low consumption of sample and reagents, the partial and reproducible development of the involved steps, that opens the possibility of reaction kinetics exploitation, the recording of a transient signal, etc. [2].

In the earlier air-segmented flow analyzers, a sampling arm was used to select either the sample or the wash (carrier) solution to be aspirated towards the analytical path [3]. This task can be considered as the beginning of commutation in flow analysis. However, little evolution in the commutation concept was noted during the development of the segmented-flow analyzers. In fact, chemical processing was not altered from sample to sample and no active devices or feedback mechanisms were present in the flow system.

* Corresponding author. Tel.: +55-19-429-4650; fax: +55-19-429-4610.
E-mail address: ezagatto@cena.usp.br (E.A.G. Zagatto).
[1] Present address: Instituto de Química, Universidade de São Paulo, São Paulo, Brazil.

0003-2670/02/$ – see front matter © 2002 Elsevier Science B.V. All rights reserved.
PII: S0003-2670(02)00628-1

Commutation became more evident in relation to unsegmented flow-analyzers conceived in the 1970s [4,5]. Steps others than single sample introduction, such as multiple injections, stream splitting, addition/removal of manifold components and stream redirecting were efficiently accomplished by using specially designed commutators. This led to the efficient implementation of merging zones, zone sampling, stopped-flow, multisite detection, in-line ion-exchange, procedures exploiting differential kinetics, simultaneous determination, etc. A comprehensive review of commutation in flow-injection analysis was presented in 1986 [6].

The single commutators, usually sliding bars or rotary valves, were only able to linked commutation because they operated in two resting positions thus originating two states. Therefore, in spite of the above-mentioned capabilities, the related systems lacked versatility. The drawback was circumvented by designing the manifold using several commutators with discrete operation [7]. This led to a drastic improvement in system performance, as 2^n states of commutation (n = number of active devices) could be established and exploited. The related flow systems, often named multicommuted ones, present potentialities to be used as general-purpose systems, as they rely on the concepts of different flow-analyzers (segmented-flow, flow-injection, sequential injection) and are compatible with streams of different characteristics (segmented, unsegmented, monosegmented, tandem).

Although, some potentialities of the flow systems exploiting multicommutation were recently outlined [8], the related concepts, adherence with the already proposed flow-analyzers and guidelines for system design were not emphasized. The main objective herein is therefore to review the concept of multicommutation in order to permit a proper evaluation of the characteristics and potentialities of the related flow systems, to assist methodological implementation and to present the similarities with other existing strategies.

2. The concept of commutation

Commutation is defined as "(1) a passing from one state to another, (2) the act of giving on thing for another, (3) the act of substituting, (4) in electricity: a change of direction of a current by a commutator" [9].

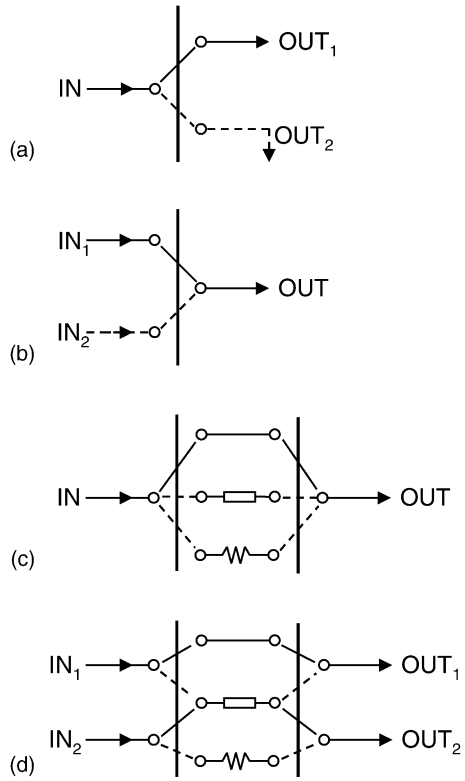

Fig. 1. Representation of some mechanical commutations in flow analysis. (a–d) Dashed lines represent the flow paths after commutation.

The different configurations in Fig. 1 illustrate mechanical commutations in flow analysis. In addition, flow rate modifications and stream reversals are also relevant examples usually accomplished without manifold reconfigurations.

The simplest mechanical commutation involves only stream redirecting (Fig. 1a and b) which is easily accomplished by using three-way valves or portions of more elaborated valves [6]. The strategy has been exploited for intermittent addition of flowing streams. In this way, a washing stream can be added (Fig. 1a) after achievement of the analytical signal in order to reduce washing time, thus improving sample throughput [10]. Analogously, a confluent stream can be added only when the processed sample is passing through a confluence point, allowing reduction of the reagent consumption [2]. Moreover, the stopped-flow approach can be implemented in a similar manner.

The sample carrier stream of a single-line flow system is allowed to recycle, and the processing sample is stopped inside the analytical path. This permits long residence times to be efficiently attained in order to improve sensitivity and/or to permit kinetic measurements [11]. On the other hand, this simple mechanical commutation permits to feed the analytical path with stacks of different zones (Fig. 1b). The flow-set up is designed in such a way that either stream IN_1 or stream IN_2 is directed towards the outlet. The strategy is often used in sandwich techniques [12] and sequential injections [13]. Expansion of this strategy permits also the establishment of tandem streams, a novel approach for handling flowing solutions. Even with a single device, fast successive commutations (multicommutation) can be performed, originating a binary string constituted by slugs of the involved solutions. An analogous strategy permits the achievement of segmented flows.

Other kind of mechanical commutation involves the exchange of manifold components (Fig. 1c) that is a powerful tool for achieving different sample residence times. In fact, two different mean sample residence times can be provided for every assayed sample depending on whether a short or a long reactor is placed in the analytical path. The approach is beneficial mainly for implementing simultaneous determinations involving kinetic discrimination or wide-range determinations [11]. Another possibility is to trap the processing sample inside an incubation coil in order to get increased residence times without pronounced dispersion [14].

An usual strategy for mechanical commutation involves two inlet and two outlet streams and offers the possibility of selecting different paths between them (Fig. 1d). The configuration can be settled by using six-port valves or sliding-bar injectors. As different components can be placed in the paths between the commuting sites, the strategy is very attractive for implementing loop-based injection [6], ion-exchange involving addition/removal of minicolumns [6], multisite detection [15], leaping filters [16], etc.

The above-mentioned potentialities are expanded by replicating the unity configurations and/or including feedback mechanisms. When the unity configurations are replicated in a single commutation unity, only two states can be established for the system, and linked commutation is concerned. System versatility can be expanded in a pronounced manner by taking advantage of discrete devices with independent operation. This is the essence of the multicommuted systems. Their inherent potentialities, also in relation to the exploitation of feedback mechanisms, are discussed below.

3. The concept of multicommutation

A flow system can be regarded as a compartment with a number of inlets (samples, reagents, keyboard commands) and several outlets (results, recycled solutions, wastes). When commutation is not so characteristic, such as in the classical segmented-flow-analyzers, influence of outlet on the inlet parameters and vice versa, as well as real-time modifications in the sample processing, are not easily accomplished. With a single commutation, only few of the potentialities inherent to flow analysis are feasible [8]. These capabilities are expanded in relation to the most advanced systems, the multicommuted ones.

A multicommuted system can be then considered as an analytical network that involves the actuation of n active devices (or n operations with a single device) on a single sample allowing the establishment of up to 2^n states. It presents several in- and outlets parameters that are often interdependent. The analytical steps required for sample processing can be defined through the control software, being eventually (in feedback exploiting systems) real-time modified. In short, multicommutation is inherent to flow systems that may present several states; the sample under processing is usually submitted to different operations, such as splitting, slicing, trapping, mixing in tandem, under different conditions. Commutation is also responsible for additions of components (including sampling loops) to the analytical path and/or stream re-directing.

More elaborated systems usually comprise more active devices. Therefore, presence of several valves in the system has been erroneously taken as an indicator of a multicommuted system. This is not a sine qua non condition, as there are multicommuted systems with a single valve [17] and flow systems with several commutators where the aspect of multicommutation is not highlighted [18,19]. It is important to emphasize that the configuration inherent to sequential injection analysis is considered here as an expansion of the

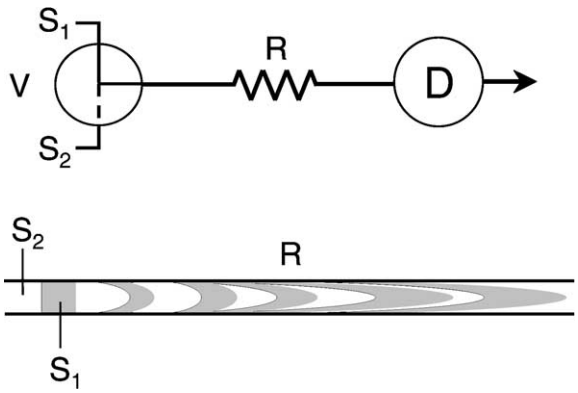

Fig. 2. Establishment of a tandem stream. S_1, S_2: miscible solutions, V: three-way solenoid valve, R: reactor coil, D: detector.

commutation concept, although multicommutation is not always well characterized.

4. Tandem streams

One of the main potentialities of multicommutation is the establishment of a tandem stream (Figs. 2 and 3). A number of aliquots of different miscible solutions can be introduced into the manifold by rapidly and sequentially switching the commutators, usually computer-controlled valves. This unique stream can be seen as a set of neighboring solution slugs that undergo fast mixing while being transported through the analytical path.

For constant total volumes of sample and reagent, mixing is improved by decreasing the aliquot volumes and increasing the number of slugs. Insertion of n pairs of sample/reagent slugs results in $2n - 1$ interfaces where mixing occurs by axial dispersion. In contrast to most flow systems, sample/reagent interaction starts in the sampling step, thus increasing the mean residence time without affecting sampling rate.

Tandem stream was initially exploited for the development of an improved single-line system for spectrophotometric multiparametric analysis of natural waters [20] into which several plugs of different reagent solutions were sequentially introduced. The ingenious strategy involved three-way computer-controlled solenoid valves and permitted the addition of different pre-selected reagents to the processed samples.

A similar strategy named tandem injection was adopted for sample dilution prior to sequential ICP–

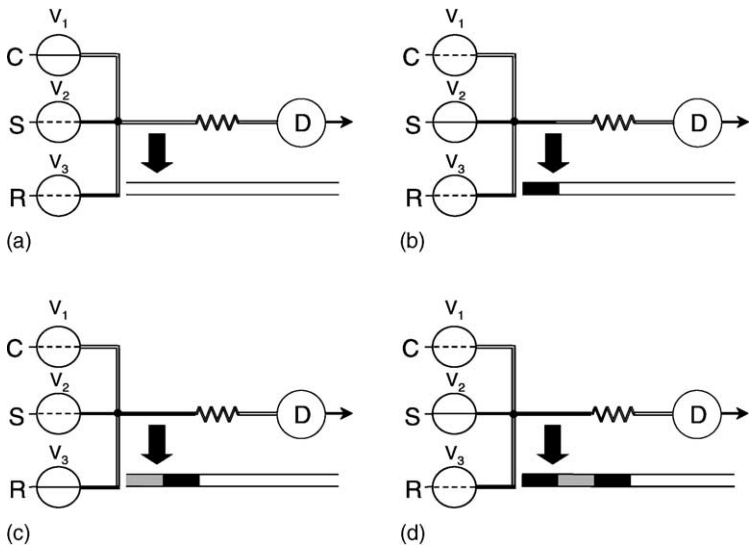

Fig. 3. Implementation of tandem streams: (a) carrier flowing towards the analytical path; (b) insertion of a sample aliquot; (c) insertion of a reagent aliquot in tandem with the sample; (d) insertion of a sample aliquot in tandem with the reagent. V_i: commutators; C: carrier; R: reagent; D: detector. For didactic purposes, dispersion at the liquid interfaces (as shown in Fig. 2) causing sample/reagent mixing was omitted.

OES or ICP–MS [21]. Several sample plugs were introduced into a diluent solution yielding a tandem stream that was directed towards the inlet of the nebuliser. Under good mixing conditions, an almost steady situation was attained. Undulations on the recorded tracing were reported, and procedures for minimizing them were discussed. Another way to implement a tandem stream is to converge different flowing solutions towards a rapidly and sequentially switching three-way valve. This is particularly attractive when the tandem stream feeds the sampling loop of a flow-injection system [22,23] or the holding coil of a sequential injection analyzer [24].

Drawbacks caused by differences in refractive index in spectrophotometric measurements can be readily minimized in flow-systems with tandem streams, as verified in the determination of pindolol in pharmaceutical preparations [25] and ethanol in alcoholic beverages [26]. Multicommuted flow systems with tandem streams were also proposed for improving sample/reagent mixing in the spectrophotometric determination of ascorbic acid [27] and clomipramine [28] in pharmaceutical preparations, and glycerol in alcoholic fermentation juices [29]. Other profitable examples are presented in the next sections.

The previously described approach has been differently named. Israel et al. termed their proposal as *tandem injection* [21]. The term *binary sampling* was adopted in the first article of the series about multicommutation [7]. The expression *multi-insertion principle* was adopted when a procedure for the determination of nitrate and nitrite in water, fertilizer and food samples was proposed [30]. However, the authors termed a similar strategy as *tandem flow* when proposing a procedure involving gas diffusion for determination of chlorine [31]. A similar approach named *pulsed flow* [32] comprised the insertion of small aliquots of different solutions at a frequency typically 1.0–1.5 Hz. Solutions are pressurized against nozzles in order to attain instantaneous turbulence that contributes to improve mixing and reduce axial dispersion. The authors coined the term *time-division multiplex technique* for an approach that consisted in using computer-controlled solenoid valves for creating concentration profiles exploited for potentiometric titration of calcium and spectrophotometric determination of phosphate [33].

5. Flow setups

Multicommutation is usually accomplished by taking advantage of valves, timing devices and other artifacts for improving system performance. These devices can be operated in a passive or active manner, and external timing is often exploited for versatility enhancement.

5.1. Systems with passive devices

In a multicommuted flow-analyzer comprising only passive devices, sample processing is defined previously to its introduction into the analytical path. In spite of this, several time-dependent analytical procedures can be efficiently carried out, as the system presents inherent timing. The discrete devices are thus used mainly to establish tandem streams, merging zones, addition/removal of components, etc. in order to improve figures of merit such as reagent consumption and sample throughput. Versatility is improved because the devices are usually independently operated. Implementation of zone sampling is a good example to illustrate this feature: with linked mechanical commutation, only one sample aliquot per injection can be re-sampled whereas a number of aliquots per injection can be obtained by exploiting discrete commutators [22].

Tandem streams are also compatible with flow networks based exclusively on passive devices. In this way, the intermittent addition of reagents was exploited for the determination of nickel with dimethylglyoxime. Different reagent plugs were inserted in tandem with several sample aliquots, allowing the establishment of a stream comprising the solutions required for iron masking, nickel oxidation and development of the color-forming reaction [34]. A similar strategy involving immobilization of the oxidizing was further proposed [23].

The potentialities of the analyzers are expanded by taking advantage of external timing. In this way, the different steps of sample processing (addition of specific reagents for sequential determinations, multiple stop periods, cascade dilutions, etc.) can be independently implemented. Another possibility is to provide via keyboard the information needed for processing different samples in a diverse and specific way as in the systems with random reagent access [2].

5.2. Systems with active devices

Incorporation of feedback mechanisms in the control software expands the performance of multicommuted flow-analyzers. With active devices strategically placed in the manifold, sample processing can be modified according to the preliminary measurements. In this way, parameters such as sample residence time or sample dispersion can be easily modified, as demonstrated in the wide range determination of calcium [35]: depending on whether the first monitored signal is acceptable for providing the analytical result, another measurement can be performed or not.

A similar strategy can be exploited in designing intelligent systems, such as the flow-injection system proposed for the analysis of saline waters by ICP–OES [36]. Matrix interferences caused by differences in salinity between sample and reference solutions were circumvented by considering a prior measurement that allowed the proper selection of the amount of sodium chloride to be added to the reference solutions.

Self-optimized flow systems are also feasible, as the operational conditions can be systematically varied according to a previously defined algorithm in order to attain the best analytical response [37]. Moreover, discrete devices can be exploited for implementing variations in flow rates, stop intervals, flow reversal, etc. They may also be useful for specific applications involving localization/processing of a flowing sample zone [38], flow batch systems, [39], etc. A deeper discussion of this possibility is outside the scope of the present text.

6. Applications

As science is recurrent, it is very difficult to precisely define when multicommutation was conceived. In fact, several contributions involving different individually operated discrete devices [20], a number of linked three-way valves [40], several commutators [22], establishment of tandem streams [20,21], etc. were proposed before the term *multicommutation* was coined. However, the applications highlighted below are restrict to those where reference to multicommutation is explicit and/or its main characteristics are exploited.

6.1. Controlled dilutions

Dilution is inherent to flow systems being dictated by parameters such as sample volume and analytical path length. Moreover, the dilution degree can be increased by exploiting zone sampling [41] or split zones [42], for example. In this way, multicommuted systems have been proposed to implement controlled dilutions in order to expand the concentration range of procedures, thus avoiding outlier samples. In this context, a flow system was proposed for controlled dilutions of plant digests aiming the direct determination of calcium by flame atomic absorption spectrometry and potassium by flame atomic emission spectrometry [43]. The diluent aliquots were intercalated in tandem with the sample plugs, and each sample/diluent volumetric ratio corresponded to a different dilution degree. The approach allowed up to 40-fold dilution without affecting the analytical precision.

An alternative approach was proposed for the fluorimetric determination of folic acid in pharmaceutical preparations [44]. Discrete commutation devices were employed to change the sample volume in order to provide variable degrees of sample dilution, thus extending the linear response range. Samples were firstly processed in a condition of medium dispersion and the analytical signal was evaluated by the control software that decided if the analyte could be quantified or if the sample should be re-processed with higher or lower dispersion. In this way, linear response was obtained within 0.100 and 40.0 mg l^{-1}, yielding a procedure able to monitor tablet dissolutions.

An automated multicommuted flow system was proposed for expanding the linear range in spectrophotometric procedures, aiming the determination of calcium in different samples [35]. Five sample-processing conditions were previously defined, corresponding to dispersion coefficients within 2.15 and 754, achieved by changing the sample volume (10–500 μl), the analytical path length (225–425 cm) and by exploiting zone sampling at different portions of the dispersed zone. The criterion for accepting a given measurement or to call for sample reanalysis was similar to that previously described. Quantification was achieved in up to three trials, and the R.S.D. were estimated as $<0.8\%$ regardless of the sample processing conditions. Linear response within 0.250 and 1000 mg l^{-1} allowed the direct determination of calcium in waters,

plant digests, antacids, fertilizers and calcareous rocks. Multicommutation was also exploited to extend the linear response range for the turbidimetric determination of sulfate in plant digests [45] and the fluorimetric determination of isoniazide in pharmaceutical preparations [46]. Also, a similar approach allowed implementing programmable isotope dilutions for ICP–MS [47]. Spikes were generated from a single enriched ^{112}Cd solution. About 30 samples could be run per hour consuming 33–168 pg of enriched ^{112}Cd per determination.

A flow system designed in the closed-loop configuration was proposed for implementing successive dilutions required for expanding the concentration range in the chloride determination in parenteral solutions [48]. The sample zone was continuously recycled through the flow cell, allowing several analytical signals to be obtained for the same sample injection. After obtaining the first analytical signal, the front and tail portions of the sample zone were removed and replaced by the reagent solution, by the action of a three-way solenoid valve. Thus, the sample dispersion and the reagent availability were both increased. The process was repeated several times, resulting in signals corresponding to different dispersion degrees, allowing achieving linear response up to 10 g l^{-1}, with R.S.D. <1.8%.

6.2. Sequential determinations

Discrete commutators with independent computer-control allow the intermittent addition of different reagents, thus expanding the potentiality for sequential determinations without changing the manifold structure. The strategy can be illustrated by the multiparametric analyses of alloys [34]. Aliquots of the reagents required for iron and chromium determination were introduced in tandem with sample slugs permitting the sequential determination.

Multicommutation was also exploited for simultaneous determination of copper and zinc in plant digests using Zincon as chromogenic reagent [49]. The analytes were in-line complexed with cyanide and the different rates of reaction with formaldehyde allowed implementing the kinetic discrimination. A three-way solenoid valve was used for managing the sample splitting, yielding two sample aliquots to be processed under different conditions. The analytical signal corresponding to the shorter residence time was proportional to zinc concentration due to the limited extension of the copper reaction whereas the following analytical signal reflected the concentration of both species. Intermittent reagent addition allowed also the design of a flow system for the determination of iron and aluminum in plant digests, using 1,10-phenantroline and Cromoazurol-S [50].

The strategy was expanded when a multicommuted flow system was proposed for spectrophotometric determination of total nitrogen and phosphorus in biological materials involving intermittent additions of several reagents and requiring increased residence times [51]. The manifold was designed with a single channel into which sodium salicylate and sodium hypochlorite or ammonium heptamolybdate and ascorbic acid were added by proper switching of strategically positioned solenoid valves. Moreover, the alkaline and acidic conditions required for the different determinations were efficiently established. Although an ammonium salt was used for the determination of phosphorus, the analytical signal corresponding to nitrogen was not hindered by carryover effects, emphasizing the capability of the strategy in dealing with addition/removal of reagents. The sample residence time was increased by decreasing the rotation speed of the computer-controlled pump after the sampling step. A multicommuted flow system was also employed for the sequential potentiometric determination of free and total cyanide exploiting gas diffusion across a PTFE membrane [52].

The potentialities of multicommutation for sequential determinations are expanded by association with multichannel detectors. Spectrophotometric multi-determinations using a low selectivity chromogenic reagent (4,2-pyridylazoresorcinol) were implemented by exploiting measurements at different pH values, addition of masking agents and kinetic/spectral discrimination for the sequential determination of iron, copper, zinc and nickel [53]. Moreover, a flow-system with intermittent addition of different selective chromogenic reagents was proposed for the determination of iron, copper, zinc, calcium and magnesium in multivitaminic preparations [54]. Sample/reagent interactions were improved due to the establishment of tandem streams.

Multicommutation permits different tasks to be simultaneously accomplished for improving system performance and analytical characteristics. In this

sense, a flow system was proposed for the inorganic speciation of nitrogen in waters [55]. For ammonium determination, the processing sample was trapped inside a coiled reactor in order to improve the reaction development. Simultaneously, another sample aliquot was processed for nitrate and nitrite. In this way, 60 determinations could be performed per hour with a 120 s residence time for ammonium, enough for achieving a 95% conversion rate. Other application in this context refers to the sequential determination of anions in natural waters [56]. The sample acted as carrier solution into which several plugs of the required chromogenic reagents were introduced. The system allowed also in-line concentration into an anion-exchange resin minicolumn simultaneously to the direct determination of the analytes in order to permit species at lower concentration to be determined.

Multicommutation allows also implementing procedures for accuracy assessment. The analyte is determined by two different methods with the same flow network and the mean of the obtained results is inherently more reliable. In this way, a multicommuted flow manifold was proposed for chloride determination in natural waters with different sample matrixes based on the spectrophotometric procedure using mercury(II) thiocyanate and the turbidimetric method using silver nitrate [57]. Moreover, in-line addition/recovery tests were implemented for every assayed sample in order to detect matrix effects.

6.3. Increased residence times

For improving sensitivity in analytical procedures based on relatively slow reactions, the system is designed to provide an increased sample processing time without impairing other features such as sampling rate and sample dispersion. In this regard, the stopped-flow approach [58] that typically involves monitoring of the processed sample after stopping it inside the flow-through detector presents unique advantages. Also, other flow setups allowing sample trapping inside specific portions of the manifold have been proposed [11,14,59]. Alternatively, increasing the sample processing time can be efficiently accomplished by exploiting segmentation [3,60]. The potentialities of these approaches are expanded with multicommutation.

Multicommutation in connection with the stopped-flow approach was exploited for the spectrophotometric determination of creatinine in urine using picric acid as reagent [61]. Design of the flow manifold allowed improving analyte conversion rate and in-line sample dilution was achieved through zone sampling. In this way, matrix effects were minimized and the dynamic response range matched the expected creatinine concentrations in the samples. As a high blank value was concerned, an ingenious strategy permitted the correction of the analytical signal. The sample aliquot was split and one portion was retained inside a warm reactor (37 °C) in order to enhance the reaction development, whereas the other was straightforward directed towards detection for evaluation of the blank signal.

The beneficial effects of implementing zone trapping with multicommutation were illustrated in relation to an improved procedure for the spectrophotometric determination of phoshate in natural waters [62]. Further, simultaneous trapping of multiple sample zones were utilized to permit an increase in the sample residence time without impairing the sampling rate in a flow system designed to spectrophotometric determination of boron in plant digests [63]. A four-way solenoid valve directed the sample zones to three similar reaction coils allowing a mean residence time of 200 s with a sampling rate of 65 determinations per hour. The favorable characteristics of the approach were also highlighted in the determination of ammonium and phosphate in natural waters using an electronically operated sliding bar commutator coupled to three-way solenoid valves [64]. The sample zones were simultaneously processed and a sampling rate of 56 determinations per hour was attained even for a 160 s residence time. Recently, the strategy was applied to the spectrophotometric determination of amiloride hydrochloride in pharmaceutic preparations. With two channels able to accommodate stopped sample zones, the sampling rate and the mean sample residence times were 30 h^{-1} and 60 s, respectively. It is interesting to comment that these figures of merit are modifiable at will depending on the sample characteristics [65].

Multicommutation has also been exploited to facilitate the introduction of sample, reagent and air bubbles into a monosegmented flow system [66]. The approach was demonstrated in the spectrophotometric

determination of manganese in soybean based on periodate oxidation of Mn(II) to permanganate in acidic medium. Improved sensitivity was attained by setting a 5 min sample residence time and immersing the main reactor inside a 47 °C water bath. The reaction was completed before detection and a sampling rate of 50 determinations per hour was achieved because four sample zones were simultaneously processed. A similar strategy was adopted in a flow system for spectrophotometric determination of L(+)-lactate in silage material using *lactate oxidase* and a crude extract containing *peroxidase* [67]. The system provided a very long sample residence time (17 min) and permitted 16 samples to be processed per hour.

6.4. Titrations

Titrations are classical procedures often required in analytical laboratories in view of the achievement of intrinsically reliable results. As they are generally tedious and time-consuming, several mechanized procedures have been proposed, including those carried out in a flow basis [68]. However, most of them cannot be rigorously considered as titrations, because a calibration step is needed [69].

True titration procedures, without requiring calibration, have been developed by exploiting multicommuted flow setups. In this context, the binary search process was proposed for end-point detection in spectrophotometric titrations [68]. It relies on the evaluation of the least volumetric fraction of the titrant causing a measurable change in the color of an indicator. Signals related to sample zones comprising only the sample or the titrant were considered as reference. For end-point detection, the sample and titrant volumetric fractions were varied by maintaining the total volume of the sample zone, similarly to the continuous variation method. Feedback mechanisms assisted the decision about whether sample or titrant volumetric fraction should be increased in order to converge to the end-point. The procedure was illustrated by the acid–base titration in the presence of phenolphthalein. End-point was reached in up to 3 min and less than 2 ml of titrant was consumed.

The binary search process was further applied to the potentiometric acid–base titration, employing a tubular polymeric membrane hydrogen ion-selective electrode [70]. A diluted buffer solution (pH 7.0) was used as carrier stream and the reference signal was estimated during its passage through the electrode. The volume of the sample zone was fixed during the entire titration procedure, thus avoiding matrix variations that could affect the electrode response; the titrant volume was continuously varied therefore a diluent solution was added to keep the total volume of the processed sample. With monosegmentation, the mixing conditions were improved without excessive sample dispersion. The search process was analogous to the molar ratio method for determining complex stoichiometry. At every step, the sample zone was monitored and the signal evaluated in order to decide if the titrant volumetric fraction should be increased or decreased. For achieving the end-point, the signal should be within the pre-selected interval defined as the mean value ± three-fold the standard deviation of the measurements performed on the buffered carrier stream. The procedure yielded precise (R.S.D. = 1%) and reliable results even for titrations of dilute weak acids. A similar algorithm was further applied for the determination of ascorbic acid in juices and soft drinks involving titration with 2,6-diclorophenol-indophenol and spectrophotometric detection [71]. Monosegmentation and tandem streams were also exploited to develop a procedure for acid–base titrations based on the Fibonacci method [72].

An ingenious approach involving one three-way valve that managed sample and the titrand inlet as a tandem stream was proposed and applied to acid–base [17], argentimetric [73] and iodometric titrations [74].

6.5. In-line concentration/separation

Procedures for in-line concentration are usually time-consuming, therefore impairing the sampling rate. The drawback can be circumvented by using a multicommuted flow manifold, as illustrated in the determination of cadmium, nickel and lead in foodstuffs and plant materials by ICP–OES [75]. In-line sorption and elution were simultaneously carried out by using three ion-exchange columns managed by a four-way valve, allowing a sampling rate of 90 determinations/h to be attained even for a 120 s loading time.

Multicommuted flow-systems were also associated to an electrothermal atomic absorption spectrometer with a tungsten-coil atomizer, aiming to perform in-line concentration and separation [76,77]. Analyte

retention/elution, system washing and column conditioning were independently accomplished by using discrete commutators. The potentialities were illustrated by in-line concentration of lead in a Chelex-100 resin minicolumn [76] and matrix separation by sorption of metal complexes in fullerene (C_{60}) aiming the determination of cadmium, lead and nickel in water samples [77]. A similar flow setup was proposed for in-line separation-concentration of copper in the analyses of unpolluted seawater by graphite furnace atomic absorption spectrometry with a W-Rh permanent chemical modifier [78].

A flow system designed with discrete commutators (three-way solenoid valves) was employed for in-line matrix separation and concentration of copper, cadmium, lead, bismuth and selenium from seawater aiming their determination by electrothermal vaporization ICP–MS [79]. In-line resin conditioning, concentration, column washing and elution were independently performed, and a sampling rate of 22 determinations/h was attained.

A multicommuted flow system was employed for overcoming the interference of lead and copper on the spectrophotometric determination of cadmium [80]. Interfering species were separated by electrolytic deposition and cadmium was in-line concentrated as chloro-complexes in an anion-exchange resin minicolumn. In this way, up to $50\,mg\,l^{-1}$ Pb^{2+} and $250\,mg\,l^{-1}$ Cu^{2+} did not interfere in the determination performed at a sampling rate of $20\,h^{-1}$ with a detection limit estimated as $0.23\,\mu g\,l^{-1}$.

6.6. Other applications

In contrast to conventional flow-systems, multicommuted systems exploiting tandem streams permit the use of a single channel for handling the different involved solutions [7]. This feature allowed exploitation of gravity to propel the solutions [81], aiming the achievement of a pulseless flow and a reduced maintenance program. The performance of the system was demonstrated in the spectrophotometric determination of chloride in natural waters with a sampling rate of 160 determinations/h and reduced reagent consumption. Gravity was also the driving force in the turbidimetric determination of sulphate in plant and animal tissues [82]. By exploiting a computer-controlled six-way solenoid valve, several sampling strategies such as tandem streams, sandwich sampling, monosegmented flow and sequential injection analysis were implemented without changing the manifold hardware.

Minimization of the reagent consumption is one of the favorable characteristics of the multicommuted flow systems, especially those exploiting tandem streams. A considerable reduction in the reagent consumption and waste generation is the most direct alternative towards the development of green analytical procedures [83]. This can be exemplified by the enzymatic determination of glucose in soft drinks and sugarcane juices where the required amounts of *peroxidase* e *glucose oxidase* were 85% lower in relation to the analogous batch procedure [84]. The reagent consumption and consequent generation of effluent volumes associated with different flow-based procedures were critically compared in relation to the determination of cabaryl with *p*-aminophenol [85]. The multicommuted system required a reagent amount similar to that of a sequential-injection system, and ca. 27-fold lower than that of a typical flow-injection system. However, other analytical figures of merit such as sampling rate and detection limit were enhanced in comparison with the sequential injection system. In addition, improved sensitivity in the spectrophotometric determination of iron in waters in a sequential injection system was achieved by exploiting tandem streams [86]. The potential of the flow-based procedures, including the multicommuted ones, to follow the general tendency towards a greener analytical chemistry was recently emphasized [87].

System optimization is usually time-consuming, and can be automatically carried out by exploiting the independent control of the discrete commutating and propelling devices, as demonstrated for chloride determination in waters [37]. System parameters such as flow-rates, sample/reagent volumes and mean available time for reaction development were real-time modified according to a simplex algorithm. The optimization process was efficient even for sample batches with pronounced variability in analyte concentrations.

The versatility of multicommutation was exploited to develop a flow system able to detect and circumvent potential sources of inaccuracy [88]. Feedback mechanisms were included in the control software aiming the real time characterization of the sources of inaccuracy and adoption of corrective actions for

every assayed sample. Specific situations where the analytical results were more susceptible to inaccuracy such as partial overlap of sample and reagent zones, improper matrix matching, incomplete masking as well as lessening of the efficiency of solid-phase reagents were emphasized.

Multicommuted flow systems with detection by chemiluminescence were proposed for determination of phenols in natural waters [89] and lactic acid in yoghurts [90]. The former procedure was based on the oxidation of phenols by permanganate in acidic medium after in-line concentration on a XAD-4 resin minicolumn. A detection limit of $5\,ng\,l^{-1}$ was attained with a sampling rate of 12 determinations/h. The procedure for lactic acid was based on reaction with *lactate oxidase* yielding hydrogen peroxide that reacted with luminol in alkaline medium producing the chemiluminescence. The sampling rate was estimated as 55 determinations/h for samples containing within 10–125 $mg\,l^{-1}$ L(+)-lactate. All required steps were efficiently implemented with discrete commutators and the procedures presented a considerable reduction in the reagent consumption.

Multicommuted flow systems were designed for the independent management of the solutions aiming in-line eletrodissolution of alloys. In this context, the direct determination of aluminium, copper and zinc in the solid sample by FAAS was implemented [91]. Calibration was performed with a single multielement solution that was processed in the flow system in order to generate the analytical curves, exploiting the linear relation between the analytical signal and the sample volume. Other example is the analysis of tool steels by ICP–OES [92].

7. Trends

A tendency towards improvement in versatility, simplicity and ruggedness of the flow-analyzers has been verified during the development of flow analysis, and multicommutation is a key feature in this context. In recent years, therefore, exploitation of commutation in relation to different modalities of flow-analyzers such as continuous flow, flow injection, sequential injection and others has becoming more and more frequent. This points out the tendency to consider multicommuted systems as an improvement of the already existing modalities and not a novel one. The growth of proposals in conexion with multicommutation is then clearly to be increased.

In view of the presence of discrete active devices in the analytical path, systems exploiting feedback mechanisms will probably be more and more designed especially with regard to intelligent systems, polyvalent systems, total analytical systems, novel procedures for in-line solvent extraction and sample preparation, implementation of several methods per analyte aiming accuracy assessment, detecting and circumventing sources of inaccuracy, etc. The tendency towards miniaturization will certainly be increased. This aspect, together with the more rational utilization of reagents by multicommuted systems, will lead to a reduction in sample and reagent consumption. As a consequence, a decreased waste generation is foreseen, matching the present tendency towards Green Chemistry.

Acknowledgements

Partial support from FAPESP, CNPq and CAPES/ICCTI is greatly appreciated.

References

[1] L.T. Skeggs, personal communication.
[2] J. Ruzicka, E.H. Hansen, Flow injection analysis, 2nd Edition, Wiley, New York, 1989.
[3] L.T. Skeggs, Am. J. Clin. Pathol. 13 (1957) 451.
[4] J. Ruzicka, E.H. Hansen, Anal. Chim. Acta 78 (1975) 145.
[5] K.K. Stewart, G.R. Beecher, P.E. Hare, Anal. Biochem. 70 (1976) 167.
[6] F.J. Krug, H. Bergamin F°, E.A.G. Zagatto, Anal. Chim. Acta 179 (1986) 103.
[7] B.F. Reis, M.F. Giné, E.A.G. Zagatto, J.L.F.C. Lima, R.A. Lapa, Anal. Chim. Acta 293 (1994) 129.
[8] E.A.G. Zagatto, B.F. Reis, C.C. Oliveira, R.P. Sartini, M.A.Z. Arruda, Anal. Chim. Acta 400 (1999) 249.
[9] J.L. McKechnie (Ed.), Websters' New Twentieth Century Dictionary of the English Language, 2nd Edition, Prentice-Hall, Englewood Cliffs, NY, 1983.
[10] E.A.G. Zagatto, A.O. Jacintho, J. Mortatti, H. Bergamin F°, Anal. Chim. Acta 120 (1980) 399.
[11] M.A.Z. Arruda, E.A.G. Zagatto, Anal. Chim. Acta 199 (1987) 137.
[12] J. Alonso, J. Bartroli, M. del Vale, M. Escalada, R. Barber, Anal. Chim. Acta 199 (1987) 191.
[13] J. Ruzicka, G.D. Marshall, Anal. Chim. Acta 237 (1990) 329.

[14] F.J. Krug, B.F. Reis, M.F. Giné, J.R. Ferreira, A.O. Jacintho, E.A.G. Zagatto, Anal. Chim. Acta 151 (1983) 39.
[15] E.A.G. Zagatto, H. Bergamin F^{o}, S.M.B. Brienza, M.A.Z. Arruda, Anal. Chim. Acta 261 (1992) 59.
[16] O. Fatibello-Filho, J.A. Nóbrega, A.J.M.G. Santos, Talanta 41 (1994) 731.
[17] C.M.N.V. Almeida, R.A.S. Lapa, J.L.F.C. Lima, E.A.G. Zagatto, M.C.U. Araújo, Anal. Chim. Acta 407 (2000) 213.
[18] E.A.G. Zagatto, B.F. Reis, M. Martinelli, F.J. Krug, H. Bergamin F^{o}, M.F. Giné, Anal. Chim. Acta 198 (1987) 153.
[19] K.K. Stewart, J.F. Brown, B.M. Golden, Anal. Chim. Acta 114 (1980) 119.
[20] D.J. Malcome-Lawes, C. Pasquini, J. Autom. Chem. 10 (1988) 192.
[21] Y. Israel, A. Lásztity, R.M. Barnes, Analyst 114 (1989) 1259.
[22] B.F. Reis, M.F. Giné, F.J. Krug, H. Bergamin F^{o}, J. Anal. At. Spectrom. 7 (1992) 865.
[23] P.B. Martelli, B.F. Reis, M. Korn, I.A. Rufini, J. Braz. Chem. Soc. 8 (1997) 479.
[24] R.N. Fernandes, M.G.F. Sales, B.F. Reis, E.A.G. Zagatto, A.N. Araújo, M.C.B.S.M. Montenegro, J. Pharm. Biomed. Anal. 25 (2001) 713.
[25] R.A.S. Lapa, J.L.F.C. Lima, B.F. Reis, J.L.M. Santos, E.A.G. Zagatto, Anal. Chim. Acta 366 (1998) 209.
[26] A.L.D. Comitre, B.F. Reis, Lab. Rob. Autom. 12 (2000) 31.
[27] A.P.S. Paim, E.A.M. Kronka, B.F. Reis, Quim. Nova 21 (1998) 47.
[28] J.L.F.C. Lima, J.A.V. Prior, B.F. Reis, J.L.M. Santos, E.A.G. Zagatto, Anal. Chim. Acta, in press.
[29] E.A.M. Kronka, P.R. Borges, R. Latanze, A.P.S. Paim, B.F. Reis, J. Flow Injection Anal. 18 (2001) 132.
[30] J. Martínez Calatayud, J.V. Garcia Mateo, V. David, Analyst 123 (1998) 429.
[31] M. Catalá Icardo, J.V. Garcia Mateo, J. Martínez Calatayud, Anal. Chim. Acta 443 (2001) 153.
[32] X.D. Wang, T.J. Cardwell, R.W. Cattrall, G.E. Jenkins, Anal. Commun. 35 (1998) 97.
[33] X.D. Wang, T.J. Cardwell, R.W. Cattrall, R.P. Dyson, G.E. Jenkins, Anal. Chim. Acta 368 (1998) 105.
[34] P.B. Martelli, B.F. Reis, E.A.M. Kronka, M. Korn, H. Bergamin F^{o}, E.A.G. Zagatto, J.L.F.C. Lima, A.N. Araújo, Anal. Chim. Acta 308 (1995) 397.
[35] F.R.P. Rocha, P.B. Martelli, R.M. Frizzarin, B.F. Reis, Anal. Chim. Acta 366 (1998) 45.
[36] M.F. Giné, H. Bergamin F^{o}, B.F. Reis, R.L. Tuon, Anal. Chim. Acta 234 (1990) 207.
[37] M.F. Giné, R.L. Tuon, A.A. Cesta, A.P. Packer, B.F. Reis, Anal. Chim. Acta 366 (1998) 313.
[38] I.M. Raimundo, C. Pasquini, Analyst 122 (1997) 1039.
[39] R.S. Honorato, M.C.U. Araújo, R.A.C. Lima, E.A.G. Zagatto, R.A.S. Lapa, J.L.F.C. Lima, Anal. Chim. Acta 396 (1999) 91.
[40] C. Pasquini, L.C. Faria, J. Autom. Chem. 13 (1991) 143.
[41] B.F. Reis, A.O. Jacintho, J. Mortatti, F.J. Krug, E.A.G. Zagatto, H. Bergamin F^{o}, L.C.R. Pessenda, Anal. Chim. Acta 123 (1981) 221.
[42] S.M.B. Brienza, E.A.G. Zagatto, O.M. Matsumoto, Lab. Rob. Autom. 3 (1991) 115.
[43] M.F. Giné, A.P. Packer, T. Blanco, B.F. Reis, Anal. Chim. Acta 323 (1996) 47.
[44] R.A.S. Lapa, J.L.F.C. Lima, B.F. Reis, J.L.M. Santos, E.A.G. Zagatto, Anal. Chim. Acta 351 (1997) 223.
[45] J.A. Vieira, B.F. Reis, E.A.M. Kronka, A.P.S. Paim, M.F. Giné, Anal. Chim. Acta 366 (1998) 251.
[46] R.A.S. Lapa, J.L.F.C. Lima, J.L.M. Santos, Anal. Chim. Acta 419 (2000) 17.
[47] A.P. Packer, M.F. Gine, B.F. Reis, A.A. Menegario, Anal. Chim. Acta 438 (2001) 267.
[48] R.A.S. Lapa, J.L.F.C. Lima, B.F. Reis, J.L.M. Santos, Anal. Chim. Acta 377 (1998) 103.
[49] C.C. Oliveira, R.P. Sartini, B.F. Reis, E.A.G. Zagatto, Anal. Chim. Acta 332 (1996) 173.
[50] E.A.M. Kronka, B.F. Reis, Quim. Anal. 17 (1998) 15.
[51] E.A.M. Kronka, B.F. Reis, M. Korn, H. Bergamin F^{o}, Anal. Chim. Acta 334 (1996) 287.
[52] M.A.B. Marin, E.M. Ganzarolli, A. Lehmkuhl, I.G. Souza, R.R.U. Queiroz, J. Autom. Methods Manage. Chem. 21 (1999) 23.
[53] F.R.P. Rocha, B.F. Reis, J.J.R. Rohwedder, Fresenius J. Anal. Chem. 370 (2001) 22.
[54] F.R.P. Rocha, P.B. Martelli, B.F. Reis, Talanta 55 (2001) 861.
[55] F.R.P. Rocha, B.F. Reis, Anal. Chim. Acta 409 (2000) 227.
[56] F.R.P. Rocha, P.B. Martelli, B.F. Reis, Anal. Chim. Acta 438 (2001) 11.
[57] C.C. Oliveira, R.P. Sartini, B.F. Reis, E.A.G. Zagatto, J.L.F.C. Lima, Anal. Chim. Acta 350 (1997) 31.
[58] J. Ruzicka, E.H. Hansen, Anal. Chim. Acta 106 (1979) 207.
[59] B.F. Rocks, R.A. Sherwood, M.M. Hosseinmardi, C. Riley, Anal. Chim. Acta 179 (1986) 225.
[60] C. Pasquini, W.A. Oliveira, Anal. Chem. 57 (1985) 2575.
[61] A.N. Araújo, J.L.F.C. Lima, B.F. Reis, E.A.G. Zagatto, Anal. Chim. Acta 310 (1995) 447.
[62] E.A.M. Kronka, B.F. Reis, J.A. Vieira, T. Blanco, A.P.G. Gervásio, Quim. Nova 20 (1997) 372.
[63] C.A. Tumang, G.C. Luca, R.N. Fernandes, B.F. Reis, F.J. Krug, Anal. Chim. Acta 374 (1998) 53.
[64] R.N. Fernandes, B.F. Reis, Talanta, in press.
[65] R.A.S. Lapa, J.L.F.C. Lima, J.L.M. Santos, Anal. Chim. Acta 407 (2000) 225.
[66] M. Smiderle, B.F. Reis, F.R.P. Rocha, Anal. Chim. Acta 386 (1999) 129.
[67] C.A. Tumang, E.P. Borges, B.F. Reis, Anal. Chim. Acta 438 (2001) 59.
[68] M. Korn, L.F.B.P. Gouveia, E. Oliveira, B.F. Reis, Anal. Chim. Acta 313 (1995) 177.
[69] K.K. Stewart, Anal. Chem. 55 (1987) 931A.
[70] P.B. Martelli, B.F. Reis, M. Korn, J.L.F.C. Lima, Anal. Chim. Acta 387 (1999) 165.
[71] A.P.S. Paim, B.F. Reis, Anal. Sci. 16 (2000) 487.
[72] R.S. Honorato, M.C.U. Araújo, G. Veras, E.A.G. Zagatto, R.A.S. Lapa, J.L.F.C. Lima, Anal. Sci. 15 (1999) 665.
[73] C.M.N.V. Almeida, M.C.U. Araújo, R.A.S. Lapa, J.L.F.C. Lima, B.F. Reis, E.A.G. Zagatto, Analyst 125 (2000) 333.
[74] A.P.S. Paim, C.M.N.V. Almeida, B.F. Reis, R.A.S. Lapa, E.A.G. Zagatto, J.L.F.C. Lima, J. Pharm. Biomed. Anal. 28 (2002) 1221.

[75] C.E.S. Miranda, B.F. Reis, N. Baccan, A.P. Packer, M.F. Giné, Anal. Chim. Acta 453 (2002) 301.
[76] M.M. Silva, F.J. Krug, P.V. Oliveira, J.A. Nóbrega, B.F. Reis, D.A.G. Penteado, Spectrochim. Acta: Part B 51 (1996) 1925.
[77] M.M. Silva, M.A.Z. Arruda, F.J. Krug, P.V. Oliveira, Z.F. Queiroz, M. Gallego, M. Valcárcel, Anal. Chim. Acta 368 (1998) 225.
[78] Z.F. Queiroz, F.R.P. Rocha, G. Knapp, F.J. Krug, Anal. Chim. Acta 463 (2002) 275.
[79] D. Pozebon, V.L. Dressler, A.J. Curtius, J. Anal. At. Spec. 13 (1998) 363.
[80] J.A. Gomes Neto, A.P. Oliveira, G.P.G. Freshi, C.S. Dakuzaku, M. Moraes, Talanta 53 (2000) 497.
[81] B.F. Reis, M.F. Giné, C.A. Tumang, Quim. Nova 19 (1996) 116.
[82] J.A. Vieira, I.M. Raimundo, B.F. Reis, Anal. Chim. Acta 438 (2001) 75.
[83] M. de la Guardia, J. Ruzicka, Analyst 120 (1995) 17N.
[84] E.A.M. Kronka, A.P.S. Paim, B.F. Reis, J.L.F.C. lima, R.A. Lapa, Fresenius J. Anal. Chem. 364 (1999) 358.
[85] B.F. Reis, A. Morales-Rubio, M. de la Guardia, Anal. Chim. Acta 392 (1999) 265.
[86] J.A. Vieira, I.M. Raimundo, B.F. Reis, E.A.G. Zagatto, J.L.F.C. Lima, Anal. Chim. Acta 366 (1998) 257.
[87] F.R.P. Rocha, J.A. Nóbrega, O. Fatibello-Filho, Green Chem. 3 (2001) 216.
[88] E.A.G. Zagatto, F.R.P. Rocha, P.B. Martelli, B.F. Reis, Pure Appl. Chem. 73 (2001) 45.
[89] J. Michalowski, P. Halaburda, A. Kojlo, Anal. Lett. 33 (2000) 1373.
[90] P.B. Martelli, B.F. Reis, A.N. Araújo, M.C.B.S.M. Montenegro, Talanta 54 (2001) 879.
[91] C.A. Giacomozzi, R.R.U. Queiróz, I.G. Souza, J.A. Gomes Neto, J. Autom. Methods Manage. Chem. 21 (1999) 17.
[92] A.P.G. Gervásio, G.C. Luca, A.A. Menegário, B.F. Reis, H. Bergamin F^{o}, Anal. Chim. Acta 405 (2000) 213.